International Journal of Engineering Science Invention Research & Development; Vol. 12, Issue 11, May 2026
www.ijesird.com, E-ISSN: 2349-6185

SIMULATION ANALYSIS OF DC VOLTAGES IN HYBRID MPPT ALGORITHMS BASED BIDIRECTIONAL DC CONVERTER

Vivek Prakash Raikwar[1], Saurabh Gupta[2], Devendra Sharma[3]
Research scholar[1],Associate Professor[2] , Assistant Professor[3]
Department of Electrical and Electronics Engineering,
Technocrat Institute of Technology and Science, Bhopal, India

***Abstract*— This paper presents a performance analysis of a bidirectional dual-switch DC–DC converter capable of operating in both buck and boost modes over a wide voltage range. While integrating hybrid energy sources, the environmental variability of PV systems is taken into account, and a neural-network-based MPPT algorithm is developed to track the maximum power point under varying irradiance conditions. This approach enhances the overall efficiency of the proposed DC–DC converter. The effectiveness of the system is validated using MATLAB/Simulink simulations.**

***Keywords*— Renewable Generation System, Bi-Directional DC Converters (BDDC), Electric Vehicles, Neural Network (NN), Hybrid Battery Storage System (HBSS), Maximum Power Point Tracking (MPPT).**

I. INTRODUCTION

The transformation of the traditional power grid system (TPGS) into a hybrid power system has been driven by the large-scale integration of renewable generation systems (RGS) and their associated power conversion interfaces, which require high-rated DC and DC–AC converters. On the generation side, the adoption of green energy technologies has accelerated significantly, with nearly 40% of total electricity now being produced from renewable sources. However, on the demand side, DC-based applications are still in the adaptation phase as part of ongoing efforts to reduce the overall carbon footprint.

DC applications rely on bidirectional DC–DC converters (BDDCs) capable of regulating and reversing voltage levels according to operational requirements. All renewable energy sources require DC battery storage systems to mitigate environmental intermittency and enhance supply reliability, necessitating BDDCs for efficient battery charging and discharging. Beyond energy storage applications, BDDCs are extensively used in electric vehicles (EVs). In EV technology, BDDCs serve dual functions: enabling charging and discharging of hybrid battery storage systems (HBSS) and managing voltage transitions during starting, running, and regenerative braking modes.

Hence development in the design of BDDC topologies is a burning topic for researcher to increase the utilization of the green resources [4]. This paper also presents a BDDC topology utilizing solar generation for charging of DC batteries. In this paper a dual switch BDDC is designed and tested under constant and variable irradiance conditions. A lot of work has been done in this field, but the novelty of the research is that, the BDDC design can work for high diversity range of voltage at input/output terminals and the controller design for switching control utilizes Neural Network (NN) tuning for generating gate pulse of the switches. Results are presented in both buck-boost mode performing charging and discharging of the battery.

TABLE I. 12-48 V SYSTEM A CASE STUDY IN EV

<table>
<tr><th>12 V system</th><th rowspan="8">12 V BUS</th><th rowspan="2">DC↔DC 48 V</th><th>48 V system</th></tr>
<tr><td rowspan="2">Power Train Control
-Engine Management
-Transmisson Control</td><td>- 48V Accumulator
-Electric AC Compressor
-Cooling Fan
-Electric Heating
-Rear Window Heater
-Air Blower
-Vaccum Pump
-Water pump
-Fuel Pump
-Electric power steering
-Roll stabilization
-Audio Amplifier
-Exterior Light</td></tr>
<tr><td>Chasis Control
-Brake System
-Suspension System</td><td colspan="2" rowspan="3">Infortainment System
-Instrumentation
-Navigation
-Radio/Display
-Communication
-Video</td></tr>
<tr><td>Safety System
-Passenger Safety
-Driver Assistance</td></tr>
<tr><td>Body Control
-Access System</td></tr>
</table>

II. BIDIRECTIONAL DC-DC CONVERTER TOPOLOGIES

Considering the wide diversity of EV range, the BDDC is required to have a high conversion range to ensure that the voltage of HBSS and vehicle bus can be effectively matched in accordance to the environmental condition of the RGS [5]. For compact EV design, the BDDC is required to have high power density to save installation space. In EV due to high switching frequencies of BDDC, it is necessary to minimize the electromagnetic interference (EMI) of the powertrain, and the input and output of the BDDC should be common ground [6]. Considering the damage from larger current ripple to HBSS, the power source side current of BDDC should be continuous to improve the durability of the power batteries/storage system [7]. In high rating EVs, high voltage and current stresses will reduce the reliability of the converter system, hence BDDC should reduce the stresses across the switches to avoid the possibility of device damage caused by high stresses [8, 9]. In addition, BDDC must have high conversion efficiency to avoid the heating and energy dissipation caused losses across the semiconductor devices [10]. All the above mentioned qualities is impossible to accommodate in a single BDDC topology. in literature numerous topologies are available to incorporate the desired features [11]. The existing BDDC mainly have the following two types: Non-isolated and Isolated BDDC. Non-isolated BDDC is an impedance network composed of inductor, capacitor and switch to realize direct DC–DC conversion [12]. A transformer is added between DC↔DC in the non-isolated BDDC to realize DC↔AC↔DC conversion [13]. A high voltage conversion ratio can be achieved by adjusting the turns ratio of the transformer [14]. The classification detail classification of BDDC is shown in Fig. 1.

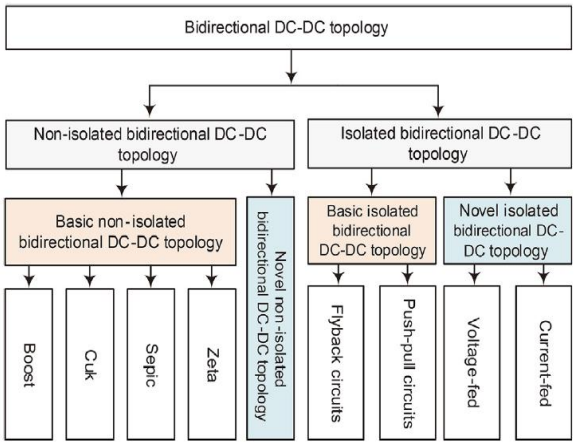

Fig. 1. Classification of BDDC topologies.

This paper presents a novel BDDC topology having dual switch configuration which can be implemented to the wide range of voltage conversion with high gain. The state of the art of the topology proposed is that it is designed with NN interfacing for tuning of PID controller in-order to obtain precise pulse train for the power semiconductor-switches. Also, the boost↔buck conversion is very smooth with high conversion gain and efficiency.

III. Proposed Work

This paper presents a DC-converter with bidirectional feature for charging and discharging of batteries connected at input side as well as output side. Input side battery is powered by PV power where as at the output terminal of BDDC, battery of EV is connected. The schematic diagram of proposed system is shown in figure 2. The BDDC designed, controls the battery status at both the ends and maintains the DC-voltage at EV side at variable voltage conditions. PV side battery, takes into account the variation in irradiance, results are also presented without connecting the PV side battery and the output obtained from PV is directly fed to the BDDC. The PV system includes the PV-array and Maximum Power Point Tracking (MPPT) algorithm. Incremental and conductance MPPT algorithm is employed to track the maximum voltage and current of solar. The PID controller is used to control the gate pulses of the two switches of BDDC. The NN helps in tuning of quickly and accurately gains of PID controller with varying operating conditions. The input layer receives the data to be processed, the hidden layer treats the network, and the output NN layer displays the network replies. This is the structure of a NN which is shown in figure 3. Because NN doesn't require a physical model or complicated mathematical calculations, it is frequently utilised for MPPT control.

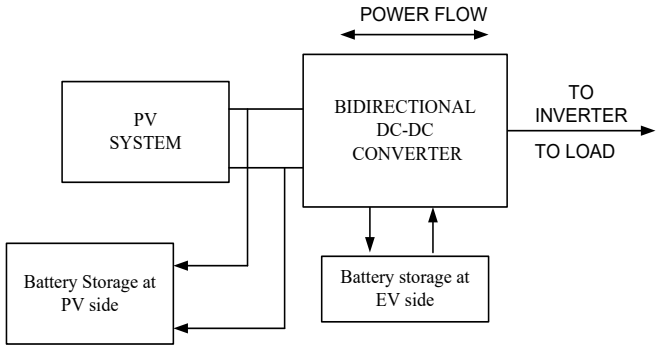

Fig. 2. Schematic of proposed BDDC topologies.

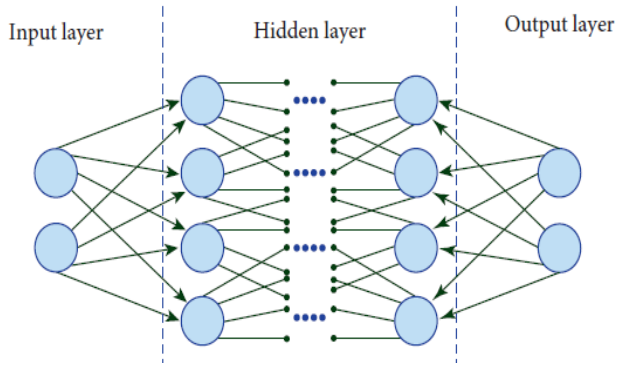

Fig. 3. Neural topology.

IV. Simulation Results

The simulation results for the proposed system model had been obtained in matlab simulation software.

The design parameters for the BDDC are given in table 2.

TABLE II. **B**

DDC DESIGN PARAMETERS

Parameters	Values
F	50Hz
Fs	10 KHz
D1	0.4
D2	0.6
C1	1000 µF
C2	100 µF
R1	0.01
R2	0.1
L1	20Mh
Proportional gain	1.5
Integral gain	25

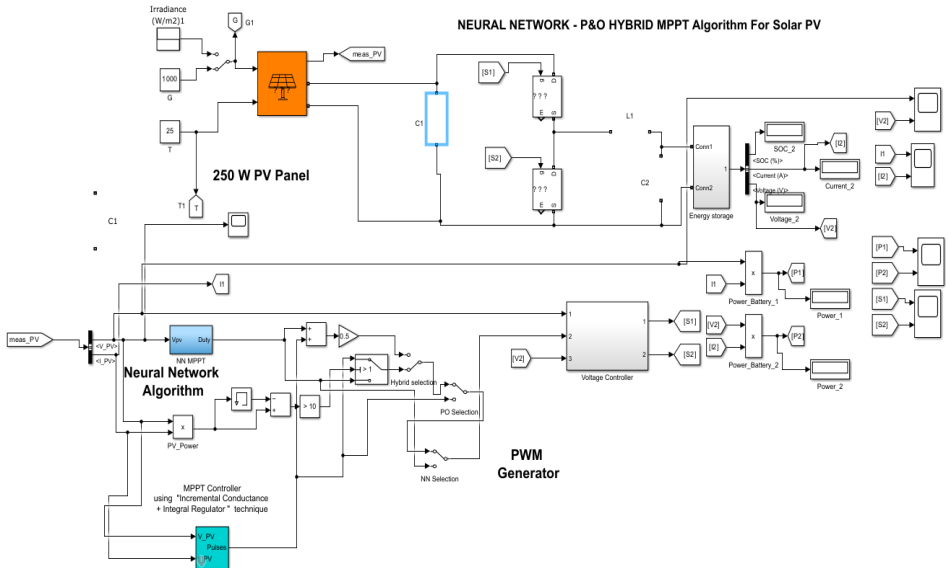

Fig. 4 The simulation model of the proposed PV-DDC

The simulation model for the voltage controller is shown in figure 5.

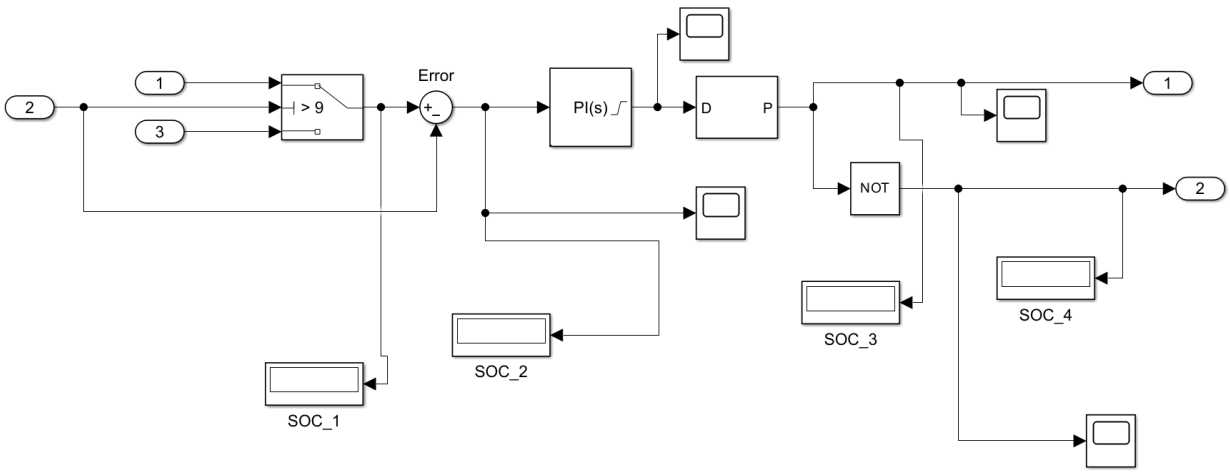

Fig. 5 Matlab simulink model of voltage controller

While designing a DC-DC converter a lot of factors has to be considered in order to successfully regulate the input and output voltage while operating in simultaneous buck-boost operation. The foremost factor is the ripples in the voltage and the currents across the inductor element. The presented DDC has the bi-directional feature which can be easily operated in buck as well as boost mode with the same design parameters.

In boost mode the voltages are smooth with approximately no ripples while in buck mode the input voltage as initial ripples but settles soon as shown in figure 6 (a) and (b). also current flowing three inductor has very low ripples as shown in figure 7.

The DDC designed is also meant for quick transition from buck mode to boost mode as shown in figure 8 and figure , it can be seen that designed DDC require 0.4 to 0.5 seconds to settle when states are switched.

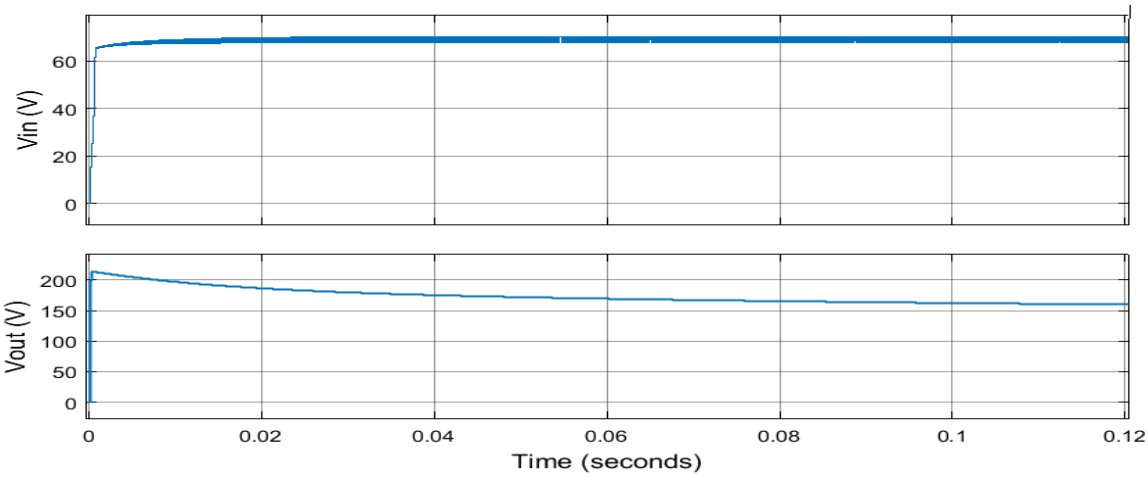

(a) Boost mode voltages

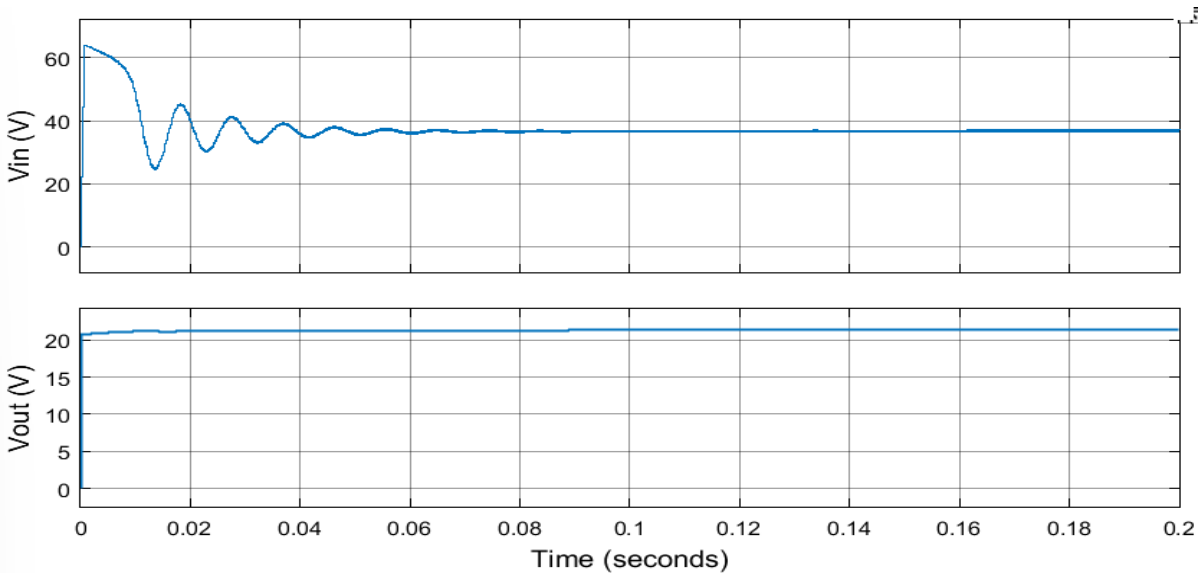

(b) Buck mode voltages

Fig. 6 Ripple comparison in voltages for the buck-boost mode

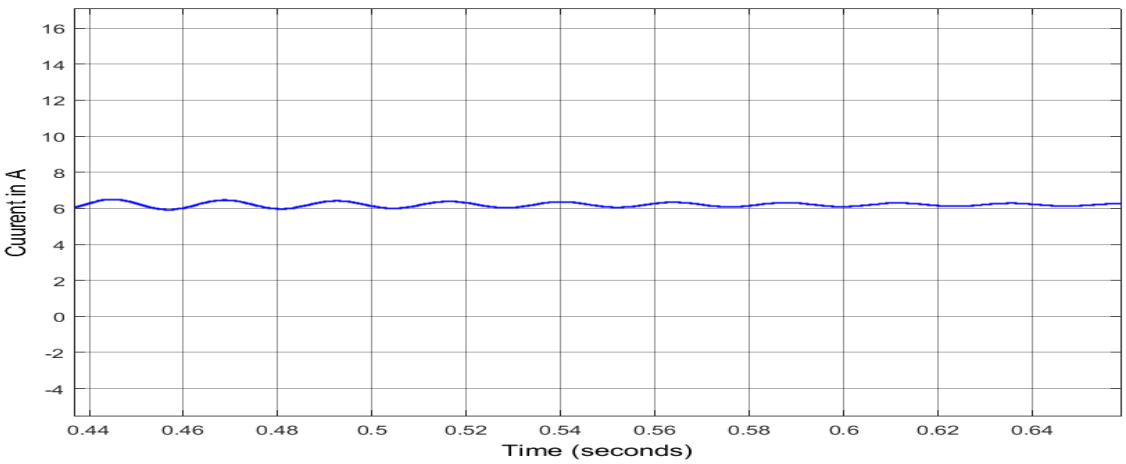

Fig. 7 Ripple current of inductor

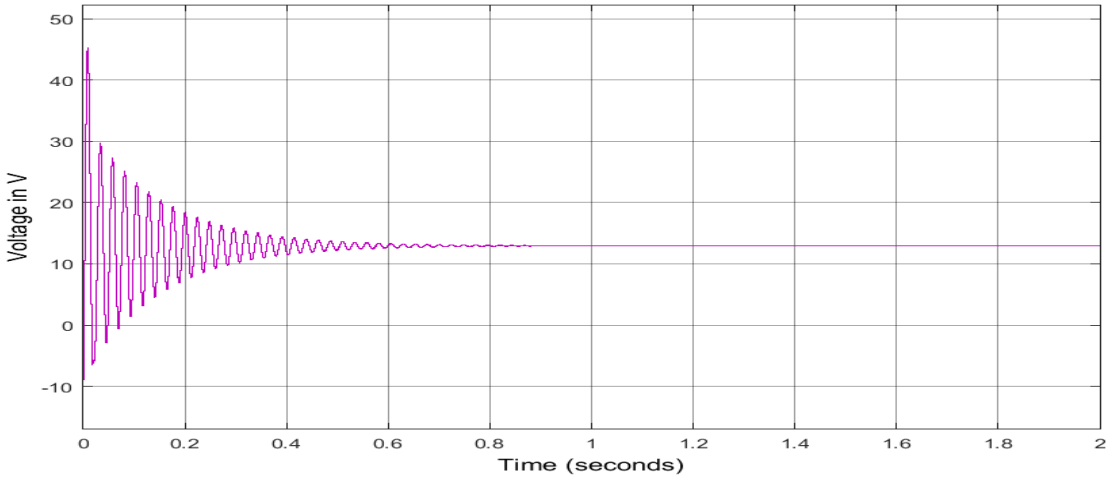

Fig. 8 state of charge of battery in buck mode

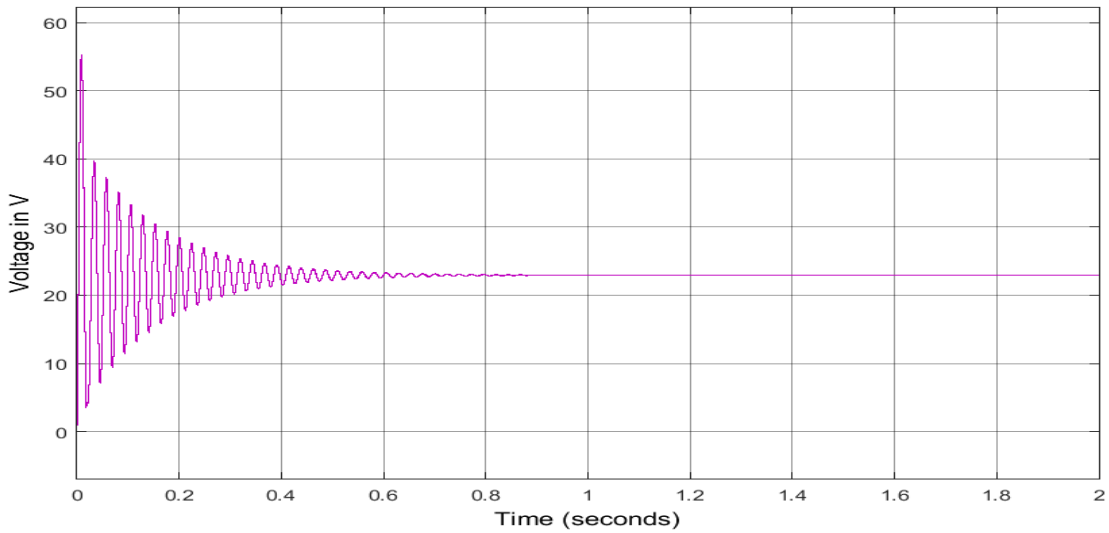

Fig 9 state of charge of battery in boost mode

V. Simulation Results

The DC battery system is increasing in numerous operations as a result of green energy system and so the bidirectional DC converters. This paper presents one such application of BDDC in EV. The battery system used in input side of the BDDC is charged via solar power and at the output side battery powers the EV. Solar energy is continuously varying in nature hence a MPPT incremental and conduct. Algorithm is employed to track the max. point of voltage and current generation from PV. To increase the tracking and for fast response, In this paper neural network is employed in conjunction with the MPPT. The proposed BDDC is tested under varying and constant irradiance for both boost↔buck operation. The output obtained is unaffected by irradiation variation and a smooth boost↔buck operation is verified. Results obtained at various voltage ranges to justifies the diversity of the design which fulfil the requirement of EV.

References

[1] Yi, W., Ma, H., Peng, S., Liu, D., Ali, Z. M., Dampage, U., & Hajjiah, A. (2022). Analysis and implementation of multi-port bidirectional converter for hybrid energy systems. Energy Reports, 8, 1538-1549.

[2] Chmielewski, A., Piórkowski, P., Bogdziński, K., & Możaryn, J. (2023). Application of a Bidirectional DC/DC Converter to Control the Power Distribution in the Battery–Ultracapacitor System. Energies, 16(9), 3687.

[3] Ye, Z., & Rajagopalan, S. (2016). Bidirectional DC/DC converter topology comparison and design. In Power Supply Design Seminar (Vol. 17).

[4] Wang, J., Wang, B., Zhang, L., Wang, J., Shchurov, N. I., & Malozyomov, B. V. (2022). Review of bidirectional DC–DC converter topologies for hybrid energy storage system of new energy vehicles. Green Energy and Intelligent Transportation, 1(2), 100010.

[5] Yahyazadeh, S., Khaleghi, M., Farzamkia, S., & Khoshkbar-Sadigh, A. (2020, February). A new structure of bidirectional dc-dc converter for electric vehicle applications. In 2020 11th Power Electronics, Drive Systems, and Technologies Conference (PEDSTC) (pp. 1-6).

[6] Al-Obaidi, N. A., Abbas, R. A., & Khazaal, H. F. (2022, May). A review of non-isolated bidirectional DC-DC converters for hybrid energy storage system. In 2022 5th International Conference on Engineering Technology and its Applications (IICETA) (pp. 248-253).

[7] Dusmez, S., Hasanzadeh, A., & Khaligh, A. (2014, June). Loss analysis of non-isolated bidirectional DC/DC converters for hybrid energy storage system in EVs. In 2014 IEEE 23rd International Symposium on Industrial Electronics (ISIE) (pp. 543-549).

[8] Sutikno, T., Aprilianto, R. A., & Purnama, H. S. (2023). Application of non-isolated bidirectional DC–DC converters for renewable and sustainable energy systems: a review. Clean Energy, 7(2), 293-311.

[9] Georgious, R., Garcia, J., Navarro-Rodriguez, A., & Garcia, P. (2018). A study on the control design of nonisolated converter configurations for hybrid energy storage systems. IEEE Transactions on Industry Applications, 54(5), 4660-4671.

[10] Tank, S. B., Manavar, K., & Adroja, N. (2015). Non-isolated bi-directional DC-DC converters for plug-in hybrid electric vehicle charge station application. Proc. of Emerging Trends in Computer & Electrical Engineering (ETCEE 2015), 13-14.

[11] Mumtaz, F., Yahaya, N. Z., Meraj, S. T., Singh, B., Kannan, R., & Ibrahim, O. (2021). Review on non-isolated DC-DC converters and their control techniques for renewable energy applications. Ain Shams Engineering Journal, 12(4), 3747-3763.

[12] Abbasian, S., & Farsijani, M. (2022). A single-switch high step-up Zero Current Switching DC-DC converter based on three-winding coupled inductor and voltage multiplier cells with quasi resonant operation. International Journal of Circuit Theory and Applications, 50(12), 4419-4433.

[13] Karbozov, A., & Ibanez, F. M. (2019, November). Optimal Design Methodology for High-Power Interleaved Bidirectional Buck-Boost Converters for Supercapacitors in Vehicular Applications. In 2019 8th International Conference on Renewable Energy Research and Applications (ICRERA) (pp. 152-157).

[14] Pellitteri, F., Miceli, R., Schettino, G., Viola, F., & Schirone, L. (2020). Design and realization of a bidirectional full bridge converter with improved modulation strategies. Electronics, 9(5), 724.